TRAFALGAR ACCESS

AUSTRALIAN MADE AND OWNED

TOUCH LATCH ACCESS PANELS

Designed and manufactured here in Australia, the Trafalgar Touch Latch Access Panel range are the perfect choice for interior design. It features concealed touch latches: a non-lockable yet secure fastener that provides a uniform look where the mechanism is completely hidden from view. Available in Customwood and Metal, the Touch Latch range offers a seamless Access Panel for every project.

KEY FEATURES

- Easy installation-nominally sized panels
- White pre-primed frame
- Customwood - Fully primed MDF panel door (including all cut edges) to reduce moisture absorption
- Metal - Pre-primed white steel frame and panel as standard
- Fully concealed hinges
- Large range of sizes
- High quality packaging to prevent damage during transit

APPLICATIONS

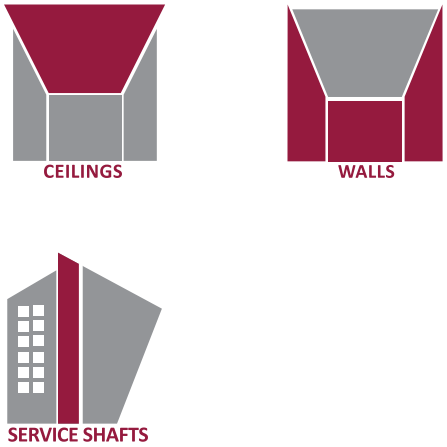

TRADES

TRAFALGAR ACCESS

AUSTRALIAN MADE AND OWNED

TABLE OF CONTENTS

Click page title to go to Page

	Section	Page
	Specifications	3
	Custom Access Panels	4
	System Range - Flanged Edge (Picture Frame)	5
	System Range- Wet Wall (Set Bead)	6
	Custom Order Form	7
Installation	Plasterboard	8
Installation	Masonry	9
Technical Drawing	Customwood Technical Drawing - Plasterboard / Masonry	10
Technical Drawing	Metal Technical Drawing - Plasterboard / Masonry	11
	FAQ	12

Trafalgar Access reserves the right to change specifications without notice. Please check with your supplier at the time of order. The information contained in this Product Manual was correct at the time of publication. E&OE.

071021

Click here to go back to Contents

CUSTOMWOOD ACCESS PANELS

SPECIFICATIONS

The Trafalgar Access difference		TRAFALGAR ACCESS	Others
Door Panel	**Customwood -** Pre-primed white MDF door panel with all cut edges painted to reduce moisture absorbtion as standard (MRH, E0, FSC MDF available on request) **Metal -** Pre-primed white steel frame and panel as standard	✓	?
Frame	Fully primed steel frame Flanged Edge/Feathered Edge (picture frame) and Wet Wall/Set Bead (plastering flush frame) **Customwood -** Profile 60mm **Metal -** Full profile: 65mm, low profile: 42mm	✓	?
Nominally Sized	Easy install sizing, a 450 x 450mm access panel is manufactured at 445 x 445mm for good fitment in a 450 x 450mm cutout	✓	?
Hinge	**Customwood** - Fully concealed cupboard hinges **Metal** - Fully concealed pin hinges (piano hinges may be required for large sizes)	✓	?
Locks	Fully concealed hardware	✓	?
Packaging	Packaged to avoid freight damage	✓	?
Customisation Available	Oversized and odd shapes Custom locks	✓	?

Trafalgar Access also supply a comprehensive range of fire rated, acoustic, customwood, security and specialty access panels.

Trafalgar Access reserves the right to change specifications without notice. Please check with your supplier at the time of order. The information contained in this Product Manual was correct at the time of publication. E&OE.

071021

071021

MADE LOCALLY MEANS VERSATILITY

AUSTRALIAN MADE AND OWNED

We can help you with your special projects!

Customisation options include:

Click here to go back to Contents

- A huge range of sizes including odd shapes and oversized
- Single and double doors
- Flanges, latches, and hinges
- Panel material - including stainless steel
- Colour options

All this made locally means fast turn around.

Talk to the Trafalgar Team today to design your custom Access Panel.*

*Customisation options limited for Acoustic and Fire Rated Access Panel ranges.

Trafalgar Access reserves the right to change specifications without notice. Please check with your supplier at the time of order. The information contained in this Product Manual was correct at the time of publication. E&OE.

Frame Type
FLANGED EDGE
(FEATHERED EDGE)
Picture Frame

Frame detail

Panel installed
(TLM-FE Shown)

Click here to go back to Contents

STANDARD STOCK

Model	Panel	Lock	Item Number	Dimensions (mm)	Frame Profile 60mm
TLC	Customwood	Touch Latch (concealed)	TLC-300-FE	300 x 300	✓
			TLC-450-FE	450 x 450	✓
			TLC-530-FE	530 x 530	✓
			TLC-550-FE	550 x 550	✓
			TLC-600-FE	600 x 600	✓
TLM	Metal	Touch Latch (concealed)	TLM-300-FE	300 x 300	Low Profile 42mm ✓
			TLM-450-FE	450 x 450	✓
			TLM-530-FE	530 x 530	✓
			TLM-550-FE	550 x 550	✓
			TLM-600-FE	600 x 600	✓

Trafalgar Access reserves the right to change specifications without notice. Please check with your supplier at the time of order. The information contained in this Product Manual was correct at the time of publication. E&OE.

Frame Type

WET WALL

(SET BEAD)

Concealed Frame

Frame detail

Panel installed
(TLM-WW Shown)

Click here to go back to Contents

STANDARD STOCK

Model	Panel	Lock	Item Number	Dimensions (mm)	Frame Profile 60mm
TLC	Customwood	Touch Latch (concealed)	TLC-300-WW	300 x 300	✓
			TLC-450-WW	450 x 450	✓
			TLC-530-WW	530 x 530	✓
			TLC-550-WW	550 x 550	✓
			TLC-600-WW	600 x 600	✓
TLM	Metal	Touch Latch (concealed)	TLM-300-WW	300 x 300	Low Profile 42mm ✓
			TLM-450-WW	450 x 450	✓
			TLM-530-WW	530 x 530	✓
			TLM-550-WW	550 x 550	✓
			TLM-600-WW	600 x 600	✓

Trafalgar Access reserves the right to change specifications without notice. Please check with your supplier at the time of order. The information contained in this Product Manual was correct at the time of publication. E&OE.

CUSTOM ACCESS PANELS TOUCH LATCH

AUSTRALIAN MADE AND OWNED

Click here to go back to Contents

Touch Latch Access Panels are the perfect choice for interior design, ideal for painting, veneering, wallpapering or laminating. Please complete this form for each size panel your require and submit for quotation. All panels will be manufactured 5mm smaller than the opening size in wall or ceiling to a tolerance of +/-2mm.

Frame Type

WET WALL (SET BEAD)

Code: TLC-CUSTOM-WW (CUSTOMWOOD)
Code: TLM-CUSTOM-WW (METAL)

Set Bead for Plastering

Panel installed
(TLM-WW Shown)

FLANGED EDGE (FEATHERED EDGE)

Code: TLC-CUSTOM-FE (CUSTOMWOOD)
Code: TLM-CUSTOM-FE (METAL)

Picture Frame

Panel installed
(TLM-FE Shown)

Custom Dimensions (mm)

Height

Width

Common Sizes (mm)	
300x300	
450x450	
530x530	
550x550	
600x600	

Frame Profile

Full Profile is used for sizes over 600 x 600mm

	60mm	
Customwood		
Metal	Low 42mm	Full 65mm

Application

Ceiling

Wall

Lock

Touch Latch (concealed)

Material

Only suitable for Touch Latch Metal (TLM)

1.1mm Zincanneal

1.1mm Stainless Steel

Other

CUSTOMER DETAILS

Please complete this form for each size panel you require and submit for quotation to **sales@tgroup.com.au**

By accepting this custom product quote, you are agreeing to the manufacture of a custom product which is subject to **Trafalgar's Terms and Conditions.**

Company Name		
Contact Name		
Quantity | Date		
E-mail | Phone		
Signature		SUBMIT

Trafalgar Access reserves the right to change specifications without notice. Please check with your supplier at the time of order. The information contained in this Product Manual was correct at the time of publication. E&OE.

INSTALLATION

PLASTERBOARD

Click here to go back to Contents

MARK

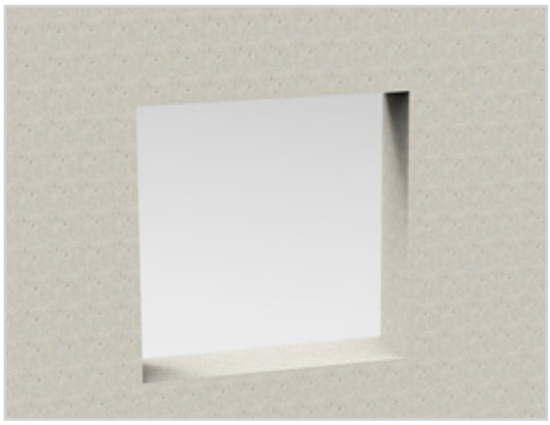

Mark out and cut an opening in the ceiling or wall to suit the dimensions of the access panel (eg. 450x450mm), taking into account the position of existing joists.

FIT

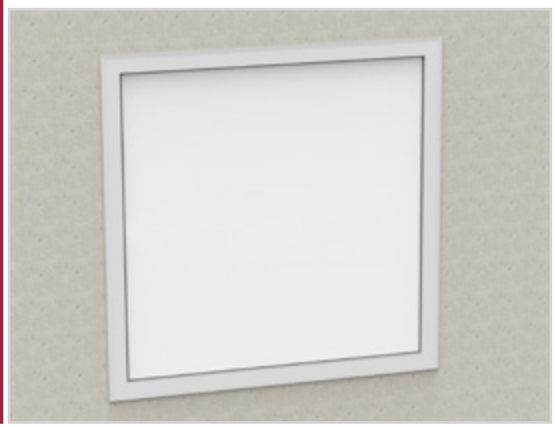

With the hatch of the access panel open, insert the panel into position.

FIX

Fix through the fixing holes in the frame into the surrounding framework, with fixings as detailed in the drawings page 10 and 11

Trafalgar Access reserves the right to change specifications without notice. Please check with your supplier at the time of order. The information contained in this Product Manual was correct at the time of publication. E&OE.

INSTALLATION

MASONRY

Click here to go back to Contents

MARK

Mark out and cut an opening in the ceiling or wall to suit the dimensions of the access panel (eg. 450x450mm), taking into account the position of existing joists.

FIT

With the hatch of the access panel open, insert the panel into position.

FIX

Fix through the fixing holes in the frame into the surrounding framework, with fixings as detailed in the drawings page 10 and 11

Trafalgar Access reserves the right to change specifications without notice. Please check with your supplier at the time of order. The information contained in this Product Manual was correct at the time of publication. E&OE.

TECHNICAL DRAWING

CUSTOMWOOD

Click here to go back to Contents

Note: All measurements are in millimeters (mm)

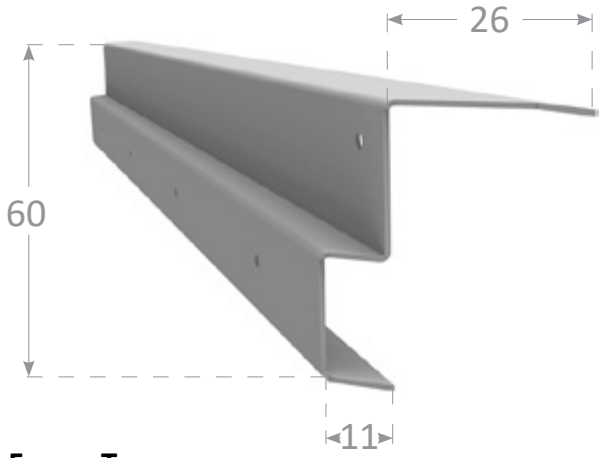

Frame Type

FLANGED EDGE (FEATHERED EDGE)

Picture Frame

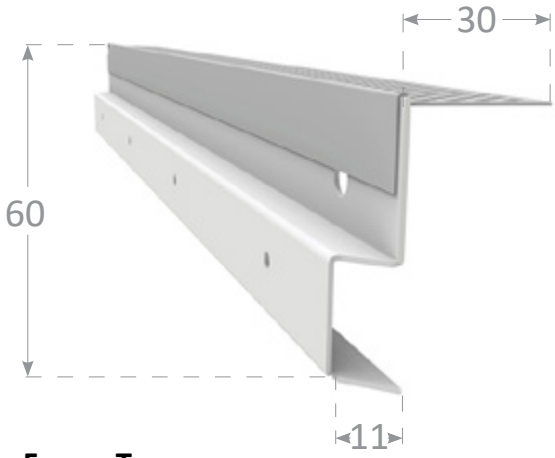

Frame Type

WET WALL (SET BEAD)

Concealed Frame

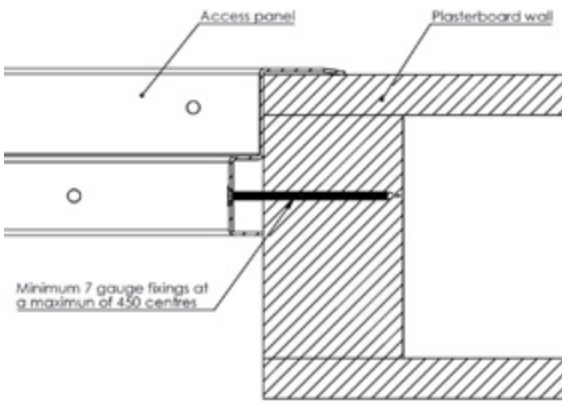

PLASTERBOARD

Install Profile

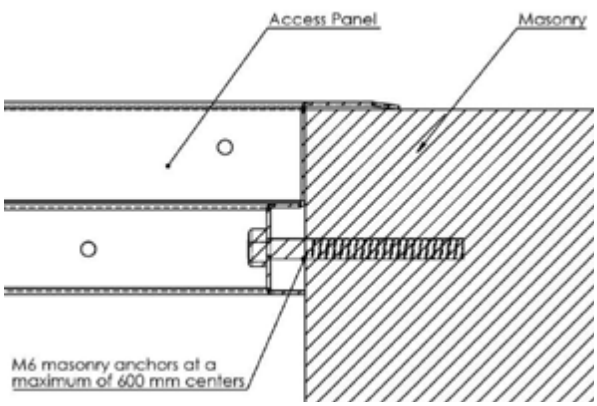

MASONRY

Install Profile

Trafalgar Access reserves the right to change specifications without notice. Please check with your supplier at the time of order. The information contained in this Product Manual was correct at the time of publication. E&OE.

TECHNICAL DRAWING

METAL

Click here to go back to Contents

Note: All measurements are in millimeters (mm)

Frame Type
LOW PROFILE - 42mm DEPTH

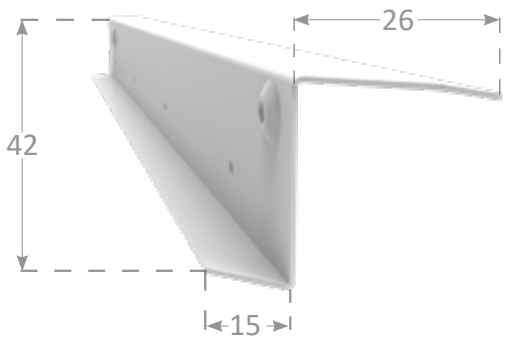

FLANGED EDGE
(FEATHERED EDGE) Picture Frame

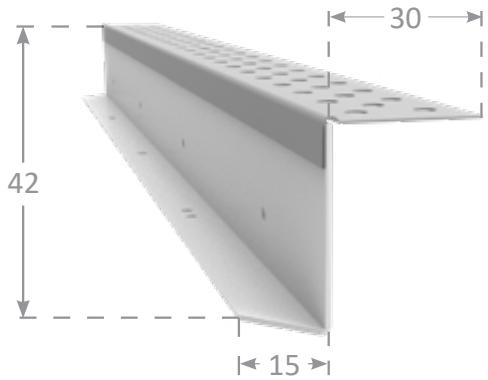

WET WALL
(SET BEAD) Concealed Frame

Frame Type
FULL PROFILE - 65mm DEPTH

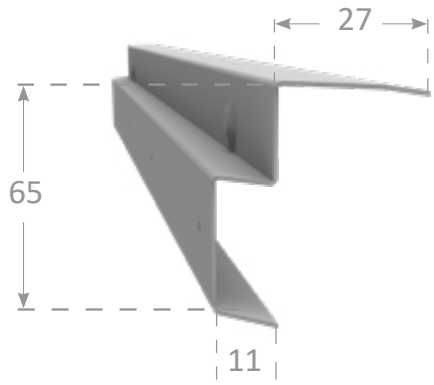

FLANGED EDGE
(FEATHERED EDGE) Picture Frame

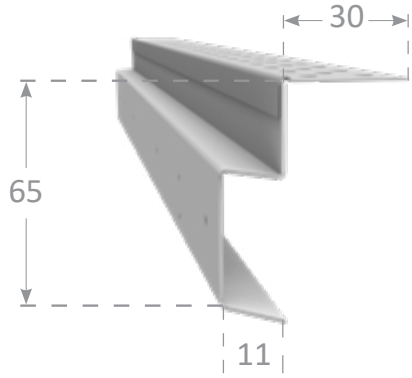

WET WALL
(SET BEAD) Concealed Frame

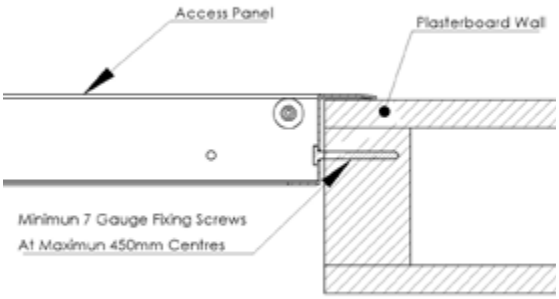

PLASTERBOARD
Install Profile

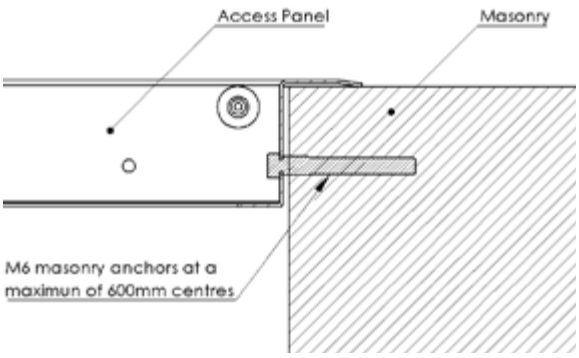

MASONRY
Install Profile

Trafalgar Access reserves the right to change specifications without notice. Please check with your supplier at the time of order. The information contained in this Product Manual was correct at the time of publication. E&OE.

TRAFALGAR ACCESS

AUSTRALIAN MADE AND OWNED

FAQ

Click here to go back to Contents

Q Can we install this panel into a floor?
A No, our Touch Latch panels are for wall and ceilings only.

Q Do these panels have an acoustic rating?
A No, our Touch Latch panels do not have an acoustic rating. Please refer to our website for our range of Acoustic Rated Access Panels.

Q How thick are the door panels in the touch latch range?
A The Touch Latch Customwood panel uses an 18mm white primed MDF door panel. The Touch Latch Metal uses a 1.1mm white primed steel door panel.

Q Is this panel high moisture resistant?
A The Touch Latch Customwood door panel is fully primed (including all cut edges) to provide higher moisture resistance. High moisture resistance (HMR) materials are available on request. The Touch Latch Metal door panel is fully primed steel and is suitable for internal areas without high corrosion risk. For areas with higher corrosion risk, stainless steel is available on request.

Q I have an unusual shape and size requirement. Can you manufacture a bespoke panel?
A Yes, access panels can be custom manufactured to your shape and size specifications.

Q Can we use this panel in a fire rated wall or ceiling?
A No, these Touch Latch panels are non fire rated. Please refer to our website for our Fire Rated Access Panel range.

Q Can you cutomise my Access Panel?
A Trafalgar Access manufacture locally and specialise in custom requirements, colours, material, shapes and size specifications, please contact the Trafalgar Technical Team on 1800 888 714 to discuss your needs and confirm it can be done.

SOCIAL MEDIA

LinkedIn YouTube

Trafalgar Access reserves the right to change specifications without notice. Please check with your supplier at the time of order. The information contained in this Product Manual was correct at the time of publication. E&OE.